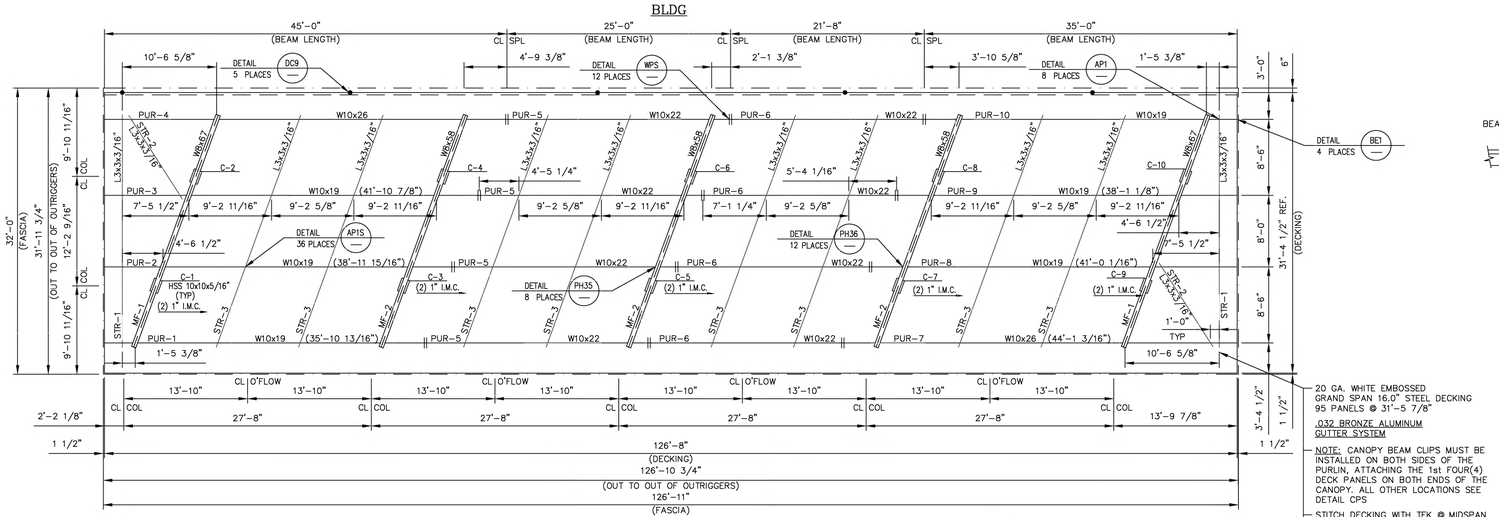

CANOPY ROOF PLAN

INSTALLATION NOTE:
–INSTALL DECKING PRIOR TO INSTALLATION OF FAUX TRUSSES
–PAINT TRUSS BOLTS AFTER INSTALLATION

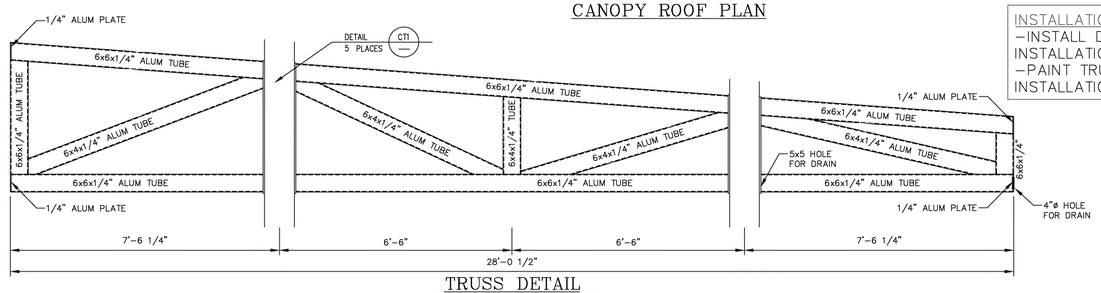

TRUSS DETAIL
NON-STRUCTURAL DECORATIVE TRUSS
ALUMINUM TUBE: ALLOY 6063-T5 MATERIAL
ALUMINUM PLATE: ALLOY 6061-T6 MATERIAL

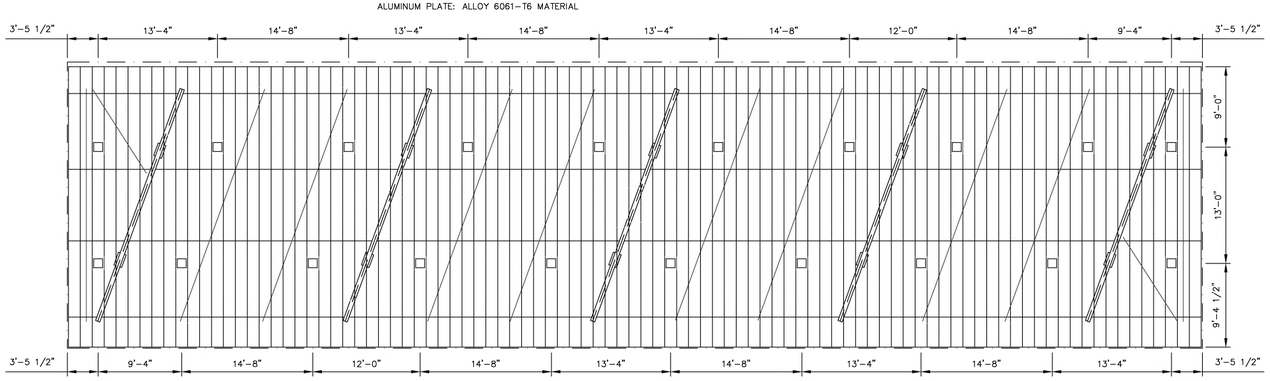

LIGHTING PLAN
(20) CREE 228 LIGHT FIXTURES; SUPPLIED BY CUSTOMER
ALL ELECTRICAL WORK BY OTHERS

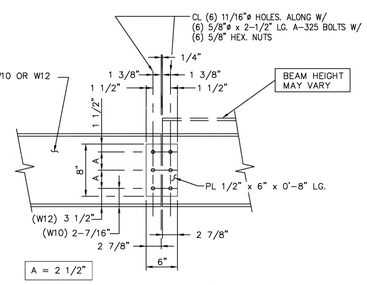

DETAIL WPS 3-BOLTS
REV.4 11/09/00

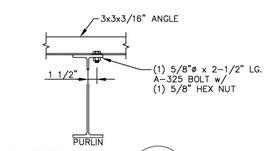

DETAIL AP1

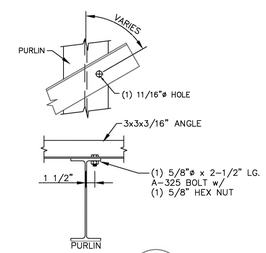

DETAIL AP1S

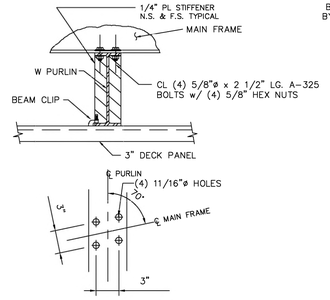

DETAIL PH35

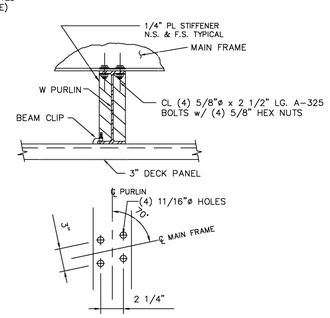

DETAIL PH36

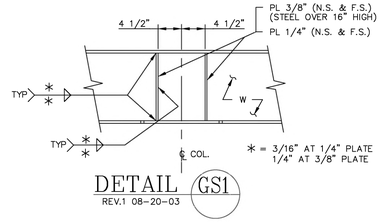

DETAIL GS1
REV.1 08-20-03

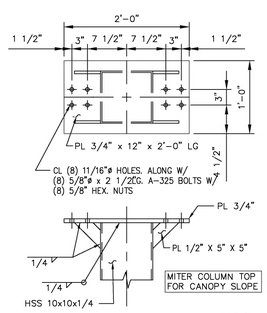

DETAIL TC3
REV.2 08/20/03

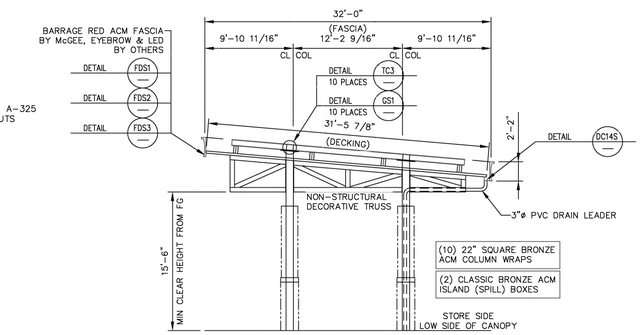

MAIN FRAME DETAIL

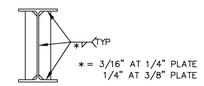

STD STIFFENER WELD DETAIL

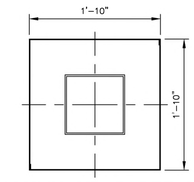

COLUMN WRAP DETAIL

ANCHOR BOLT SHIPPING REQUIREMENTS

ANCHOR BOLT USE	BOLT DESCRIPTION	QUANTITY
BCS–BASE PLATE (10 PLACES)	1 1/4" x 36" LONG	40

HARDWARE LIST BREAK–DOWN (REFERENCE ONLY)

ITEM USE (# OF PLACES FOR CHECKING ONLY)	DESCRIPTION	QUANTITY
TC3–TOP PLATE (10 PLACES)	5/8" x 2–1/2" BOLTS w/ NUTS	80
WPS–BEAM SPLICE (12 PLACES)	5/8" x 2–1/2" BOLTS w/ NUTS	72
WPS–BEAM SPLICE (12 PLACES)	6x10x3/8" PLATE	12
PH35–CONNECTION (8 PLACES)	5/8" x 2–1/2" BOLTS w/ NUTS	32
PH36–CONNECTION (12 PLACES)	5/8" x 2–1/2" BOLTS w/ NUTS	48
AP1–CONNECTION (8 PLACES)	5/8" x 2–1/2" BOLTS w/ NUTS	8
AP1S–CONNECTION (36 PLACES)	5/8" x 2–1/2" BOLTS w/ NUTS	36
CT1–CONNECTION (5 PLACES)	LINDAPTER HOLLO BOLT M12–#1 (GALVANIZED)	80

CANOPY SHIPPING STEEL HARDWARE MANIFEST

QUANTITY	DESCRIPTION	QUANTITY SHIPPED	PULLED BY	CHECKED BY	TRAILER #	LOADED BY
276	5/8" x 2–1/2" BOLTS w/ NUTS					
80	LINDAPTER HOLLO BOLT M12–#1 (GALVANIZED)					
12	(WPS) 6x10x3/8" PLATE					

CANOPY SHIPPING MANIFEST

		TOP PLATE	BASE PLATE	PLATE DRAINS	W/S & CONDUIT	VENT
2	MF–1 W8x67 (27'–7 1/4")					
3	MF–2 W8x58 (27'–7 1/4")					
1	PUR–1 W10x19 (35'–10 11/16")					
1	PUR–2 W10x19 (38'–11 13/16")					
1	PUR–3 W10x19 (41'–10 3/4")					
1	PUR–4 W10x26 (44'–11 7/8")					
4	PUR–5 W10x22 (24'–11 3/4")					
4	PUR–6 W10x22 (21'–7 3/4")					
1	PUR–7 W10x26 (44'–1 1/16")					
1	PUR–8 W10x19 (40'–11 15/16")					
1	PUR–9 W10x19 (38'–1")					
1	PUR–10 W10x19 (34'–11 7/8")					
2	STR–1 L3x3x3/16" (26'–1 1/16")					
2	STR–2 L3x3x3/16" (11'–1 3/16")					
8	STR–3 L3x3x3/16" (27'–7 1/4")					
5	3–PIECE ALUM. TRUSS					
5	COL 1,3,5,7,9, HSS 10x10x5/16"					
5	COL 2,4,6,8,10, HSS 10x10x5/16"					
1–LOT	HARDWARE					

PERMIT SET 8/10/23

LAWRENCE R. PILON/ PROFESSIONAL ENGINEER
51 MAPLEVIEW DRIVE/PENNELLVILLE, NY 13132
(315) 668–0039

McGEE CORPORATION
12701 East Independence Blvd. P.O. Box 1375
Matthews, NC 28106–1375
Phone: (704) 882–1500
Watts: (800) 526–5589

These prints are the property of McGee Corp.. Reproduction or reuse is prohibited without written permission.

PR. JOB NO.	FINAL JOB NO.	DRAWING NO.
	63611	P063611A

SHEETZ INC
NEW MARKET BLVD & CHESTNUT DR
BOONE, NC 28607 (WATAGUA)

SCALE: 1/8"=1'–0" | IN ACCORDANCE | DRAWN BY: JWG
DATE: 8/9/23 | WITH REV. LETTER: ____ | CHK'D BY:

TRUSS CANOPY 32'–0" x 126'–11"

ROOF PLAN & DETAILS

SHEET NO. 2 OF 3

NORTH CAROLINA PROFESSIONAL SEAL 022186 ENGINEER LAWRENCE R. PILON
63611 8/9/23

CAD FILE NO./PLOT SCALE
1/8"=1'–0"
63611