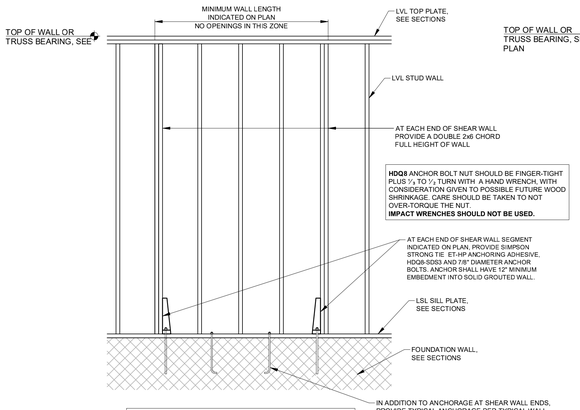

1 TYPICAL SHEAR WALL DETAIL
SCALE: NONE

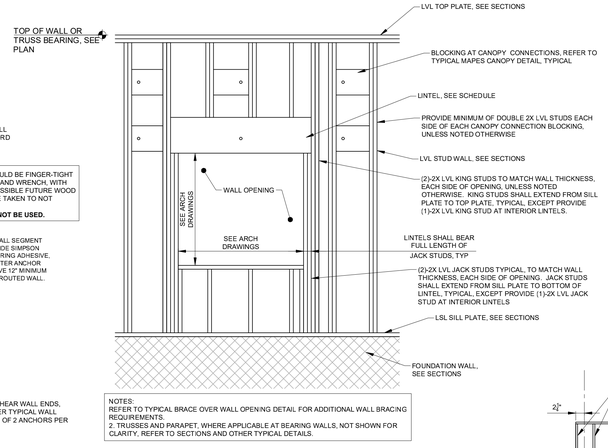

2 TYPICAL OPENINGS IN STUD WALL
SCALE: NONE

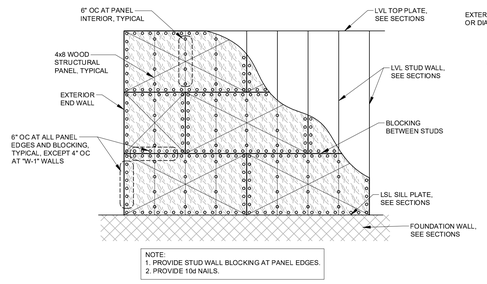

3 TYPICAL WALL SHEATHING NAILING PATTERN
SCALE: NONE

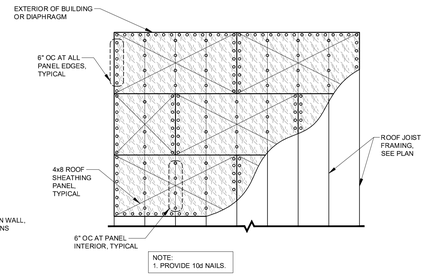

4 TYPICAL ROOF SHEATHING NAILING PATTERN
SCALE: NONE

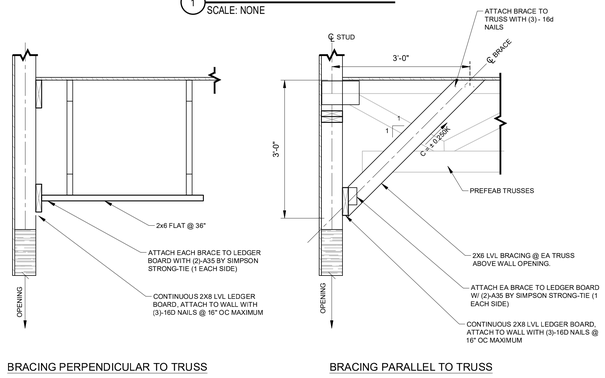

5 TYPICAL BRACING OVER WALL OPENING DETAIL
SCALE: NONE

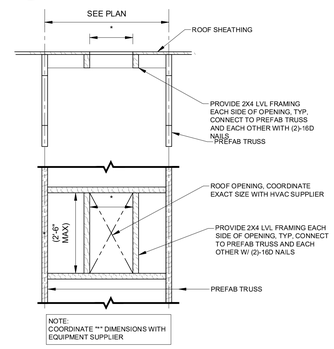

6 TYPICAL ROOF OPENING DETAIL
SCALE: NONE

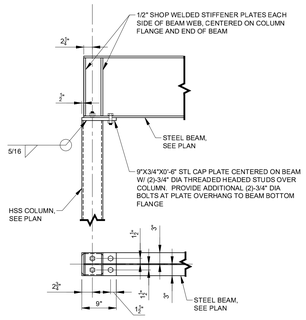

7 TYPICAL BEAM END TO COLUMN DETAIL
SCALE: NONE

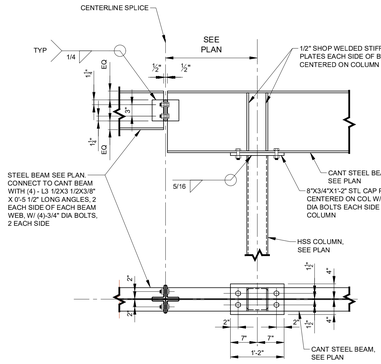

8 TYPICAL BEAM TO CANTILEVER BEAM AND COLUMN DETAIL
SCALE: NONE

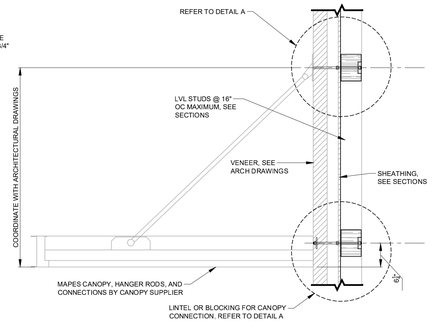

9 TYPICAL MAPES CANOPY DETAIL
SCALE: NONE

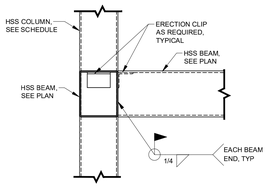

10 TYPICAL HSS BEAM TO HSS COLUMN DETAIL
SCALE: NONE

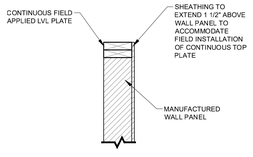

11 TYPICAL TOP OF MANUFACTURED WALL PANEL DETAIL
SCALE: NONE

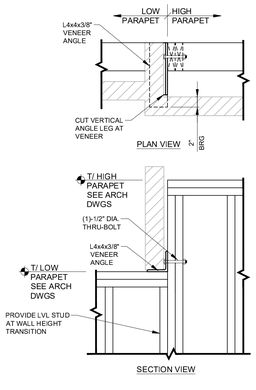

12 TYPICAL HIGH PARAPET VENEER RETURN
SCALE: NONE

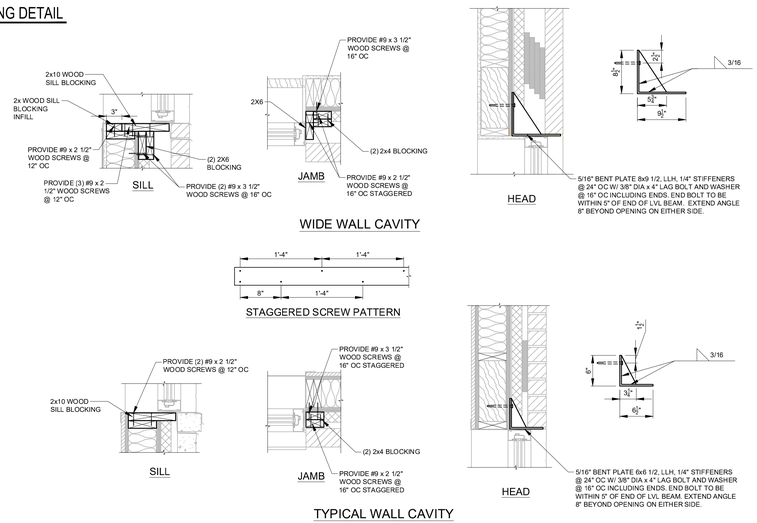

13 TYPICAL BENT PLATE & BLOCKING FASTENING DETAILS
SCALE: 1" = 1'-0"

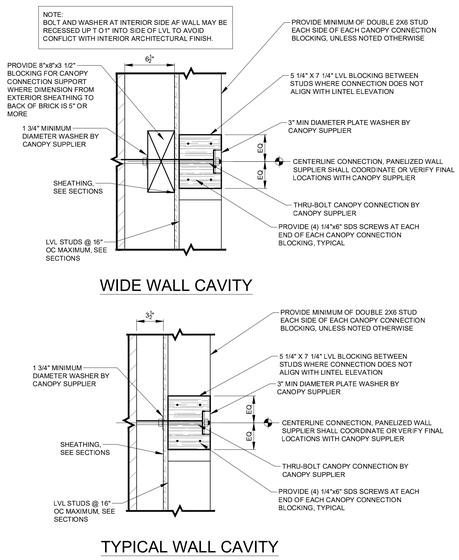

DETAIL A

DIVINEY & ASSOCIATES
Structural Engineers, LLC
310 Penn Street, Suite 200 , Hollidaysburg, PA 16648 814-317-5037

Convenience Architecture and Design P.C.
351 Sheetz Way, Claysburg, PA 16625
phone (814) 239-6013
email tcolumbu@sheetz.com
web site www.sheetz.com

PROJECT NAME:
NEW SHEETZ STORE

BOONE

East King Street
and New Market Blvd.
Boone, NC 28607

OWNER:
SHEETZ, INC.

5700 SIXTH AVE.
ALTOONA, PA 16602

CONSULTANT

PROFESSIONAL

KEYPLAN

MARK	DATE	DESCRIPTION

ISSUE:	07.28.2023
SITE ID NO:	214353
AUTHOR BY:	DLD
REVIEW BY:	RSD
VERSION:	6132L_v1.4

STRUCTURAL TYPICAL DETAILS

S602

PERMIT REVIEW DRAWINGS